6.30” Internal Diameter

Width 1.28”

- Application - Metering
- Frequency 50 - 400hz
- AC capability 50 - 5000 Amperes
- Insulation Class 0.6kV, 10kV BIL full wave
- Other ratios available
- Secondary terminals are brass screws No. 10-32 with one flatwasher, lockwasher and hexagonal nut.
- Approximate weight 4.5 lbs
- UL and cUL Certified per ANSI/IEEE C57.13 standard

c US E469271 c US 272140

ELECTRICAL SPECIFICATIONS

CATALOG NUMBER	CURRENT RATIO (A)	ANSI METERING CLASS AT 60HZ					SECONDARY WINDING RESISTANCE(OHMS @75C)	CURRENT RATING FACTOR @30C
		B0.1	B0.2	B0.5	B0.9	B1.8		
ICT80013	250:5	1.2					0.06	2.00
ICT80008	400:5	2.4	2.4	2.4			0.10	2.00
ICT80006	600:5	0.3	0.3	1.2	1.2		0.47	2.00
ICT80009	800:5	0.3	0.3	0.6	1.2	2.4	0.12	2.00
ICT80010	1000:5	0.3	0.3	0.3	0.6	1.2	0.23	2.00
ICT80002	1200:5	0.3	0.3	0.3	0.6	1.2	0.38	1.50
ICT80011	1500:5	0.3	0.3	0.3	0.3	0.6	0.47	1.50
ICT80005	1600:5	0.3	0.3	0.3	0.3	0.6	0.50	1.50
ICT80012	2000:5	0.3	0.3	0.3	0.3	0.6	0.43	1.50
ICT80003	2500:5	0.3	0.3	0.3	0.3	0.6	0.56	1.33
ICT80001	3000:5	0.3	0.3	0.3	0.3	0.6	0.69	1.33
ICT80007	3200:5	0.3	0.3	0.3	0.3	0.3	0.74	1.33
ICT80014	3500:5	0.3	0.3	0.3	0.3	0.3	0.80	1.33
ICT80004	4000:5	0.3	0.3	0.3	0.3	0.3	0.95	1.00
ICT80015	5000:5	0.3	0.3	0.3	0.3	0.3	1.25	1.00

MECHANICAL SPECIFICATIONS

FRONT VIEW

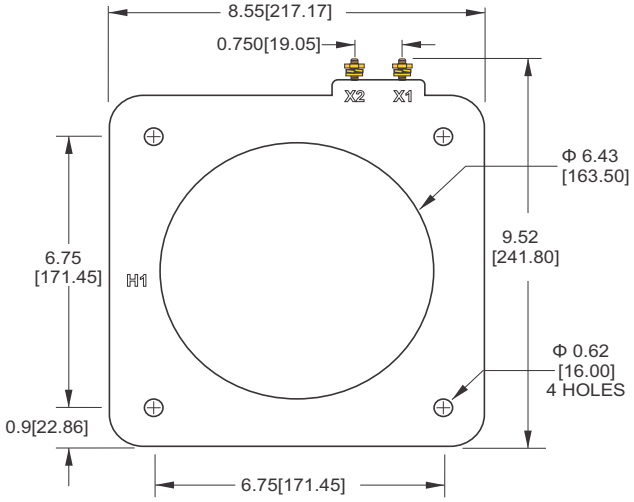

SIDE VIEW

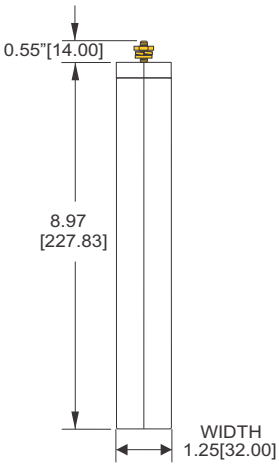

CONNECTION DIAGRAM

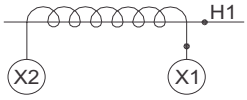

DIMENSIONS IN INCHES[MM]

6.30” Internal Diameter

Width 1.28”
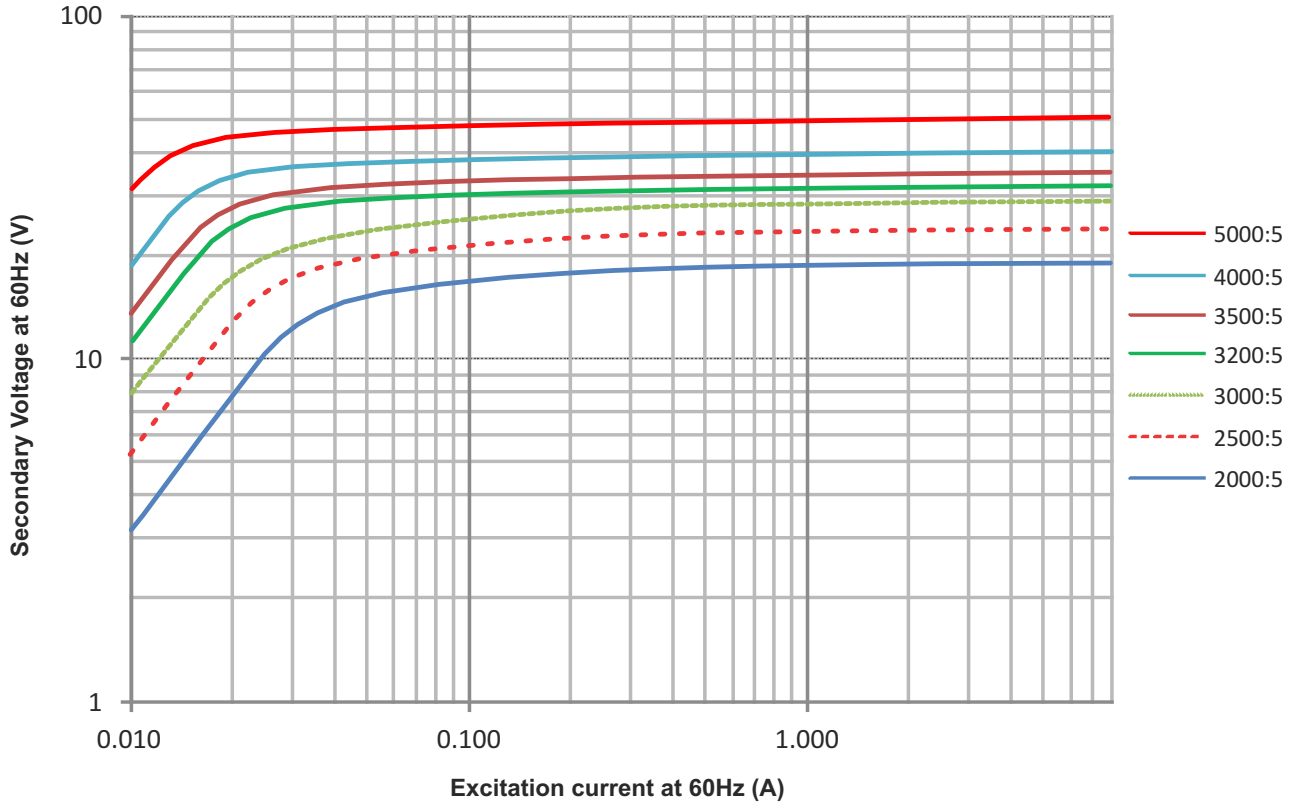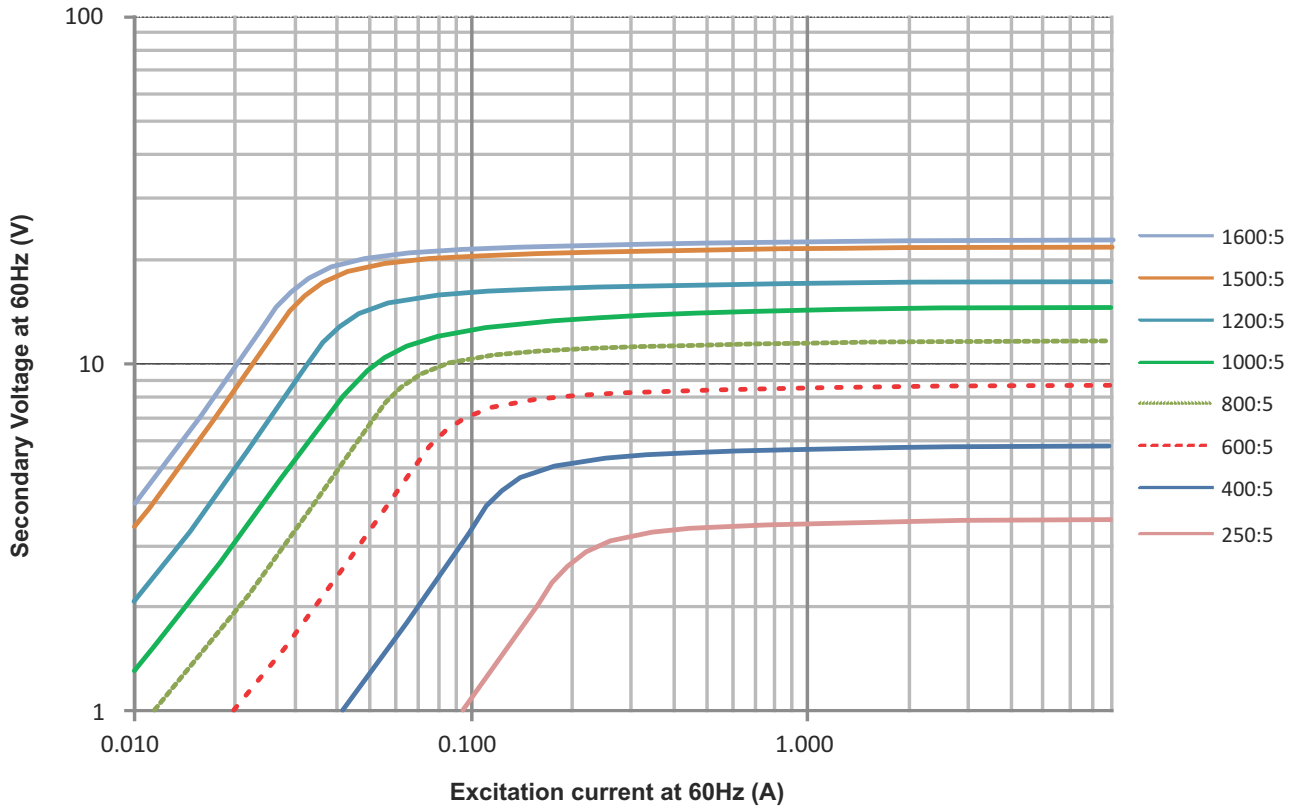
Typical Excitation Curves